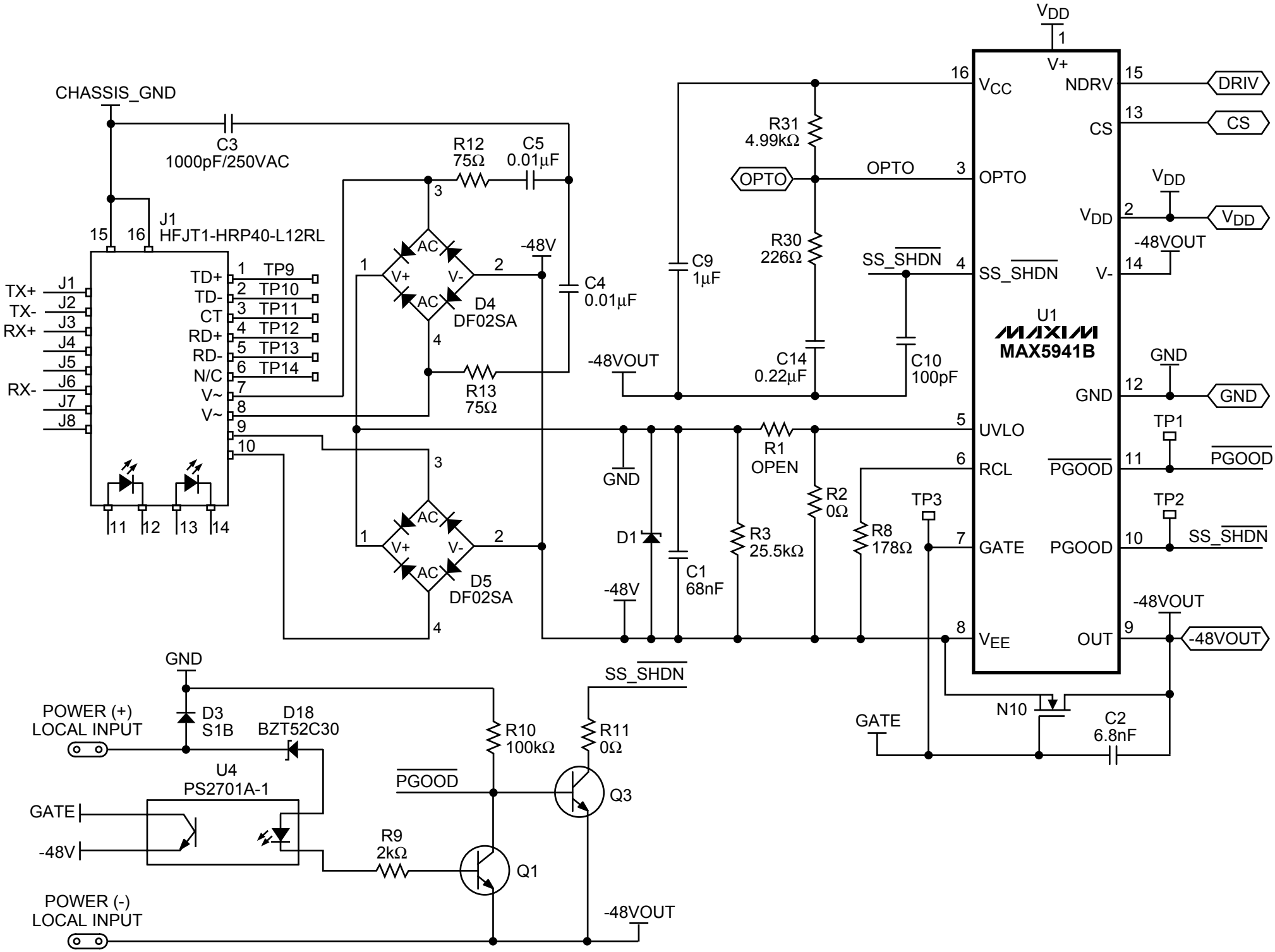
CHASSIS_GND
C3
1000pF/250VAC
J1
HFJT1-HRP40-L12RL
TX+
TX-
RX+
RX-
TD+
TD-
CT
RD+
RD-
N/C
V~
TP9
TP10
TP11
TP12
TP13
TP14
R12
75Ω
C5
0.01µF
D4
DF02SA
R13
75Ω
C4
0.01µF
-48V
-48VOUT
D5
DF02SA
GND
D1
C1
68nF
R1
OPEN
R2
0Ω
R3
25.5kΩ
R8
178Ω
TP3
C9
1µF
R31
4.99kΩ
OPTO
R30
226Ω
C14
0.22µF
SS_SHDN
C10
100pF
VDD
U1
MAXIM
MAX5941B
VCC
NDRV
CS
V+
V-
UVLO
RCL
GATE
VEE
PGOOD
OUT
DRIV
TP1
TP2
N10
C2
6.8nF
POWER (+)
LOCAL INPUT
D3
S1B
D18
BZT52C30
U4
PS2701A-1
R10
100kΩ
R11
0Ω
Q3
R9
2kΩ
Q1
POWER (-)
LOCAL INPUT