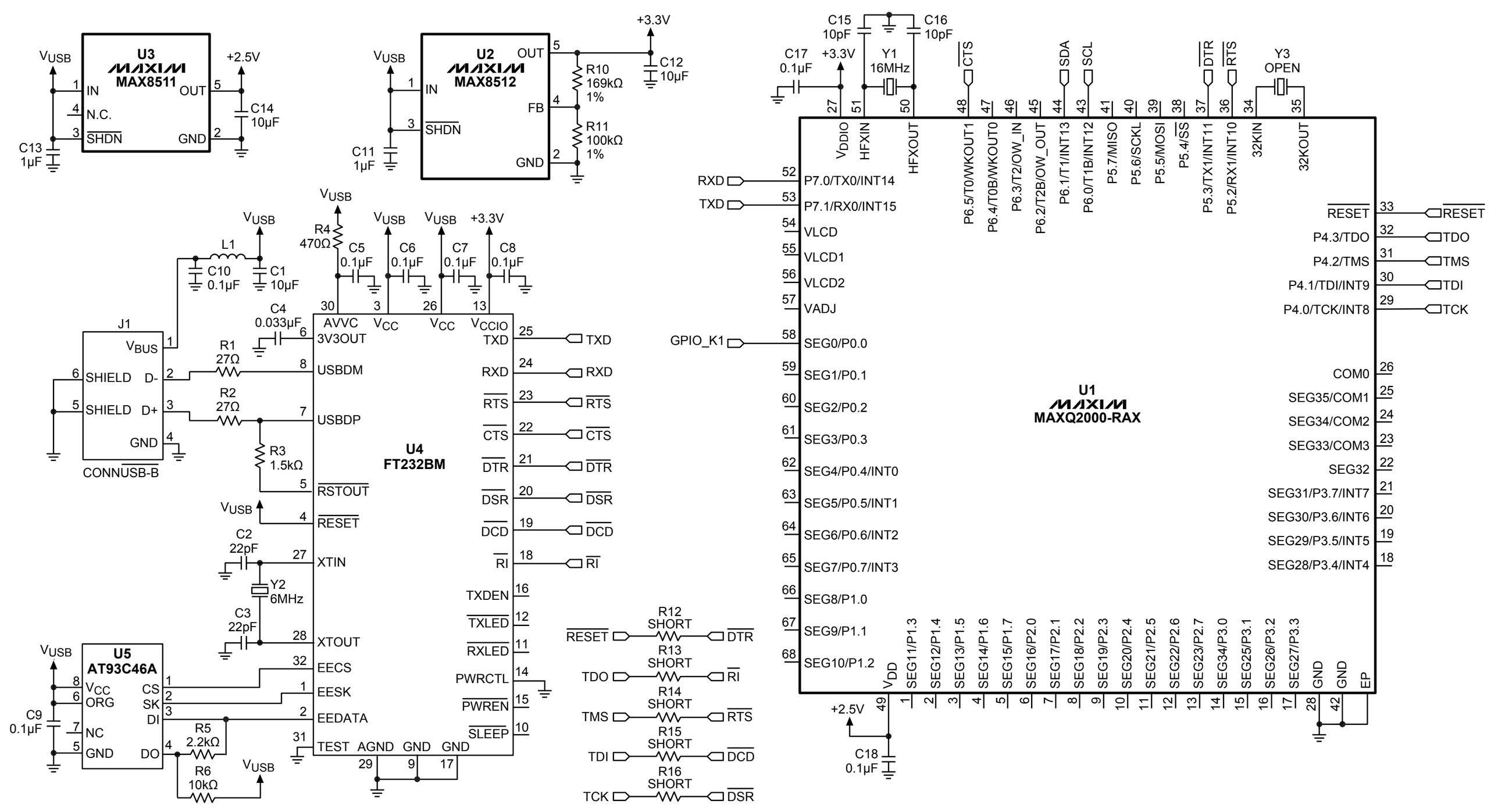
U3
MAX8511
IN
N.C.
SHDN
OUT
GND
VUSB
+2.5V
C13
1µF
C14
10µF
U2
MAX8512
IN
SHDN
OUT
FB
GND
R10
169kΩ
1%
R11
100kΩ
1%
C11
1µF
C12
10µF
+3.3V
C15
10pF
C16
10pF
C17
0.1µF
Y1
16MHz
Y3
OPEN
U1
MAXQ2000-RAX
VDDIO
HFXIN
HFXOUT
P7.0/TX0/INT14
P7.1/RX0/INT15
VLCD
VLCD1
VLCD2
VADJ
SEG0/P0.0
SEG1/P0.1
SEG2/P0.2
SEG3/P0.3
SEG4/P0.4/INT0
SEG5/P0.5/INT1
SEG6/P0.6/INT2
SEG7/P0.7/INT3
SEG8/P1.0
SEG9/P1.1
SEG10/P1.2
VDD
SEG11/P1.3
SEG12/P1.4
SEG13/P1.5
SEG14/P1.6
SEG15/P1.7
SEG16/P2.0
SEG17/P2.1
SEG18/P2.2
SEG19/P2.3
SEG20/P2.4
SEG21/P2.5
SEG22/P2.6
SEG23/P2.7
SEG34/P3.0
SEG25/P3.1
SEG26/P3.2
SEG27/P3.3
GND
GND
EP
P6.5/T0/WKOUT1
P6.4/T0B/WKOUT0
P6.3/T2/OW_IN
P6.2/T2B/OW_OUT
P6.1/T1/INT13
P6.0/T1B/INT12
P5.7/MISO
P5.6/SCKL
P5.5/MOSI
P5.4/SS
P5.3/TX1/INT11
P5.2/RX1/INT10
32KIN
32KOUT
RESET
P4.3/TDO
P4.2/TMS
P4.1/TDI/INT9
P4.0/TCK/INT8
COM0
SEG35/COM1
SEG34/COM2
SEG33/COM3
SEG32
SEG31/P3.7/INT7
SEG30/P3.6/INT6
SEG29/P3.5/INT5
SEG28/P3.4/INT4
RXD
TXD
GPIO_K1
CTS
SDA
SCL
DTR
RTS
+2.5V
C18
0.1µF
U4
FT232BM
AVVC
3V3OUT
VCC
VCCIO
USBDM
USBDP
RSTOUT
RESET
XTIN
XTOUT
EECS
EESK
EEDATA
TEST
AGND
TXD
RXD
RTS
CTS
DTR
DSR
DCD
RI
TXDEN
TXLED
RXLED
PWRCTL
PWREN
SLEEP
R4
470Ω
C5
0.1µF
C6
0.1µF
C7
0.1µF
C8
0.1µF
L1
C10
0.1µF
C1
10µF
C4
0.033µF
J1
VBUS
SHIELD
D-
D+
GND
CONNUSB-B
R1
27Ω
R2
27Ω
R3
1.5kΩ
C2
22pF
Y2
6MHz
C3
22pF
U5
AT93C46A
VCC
ORG
NC
GND
CS
SK
DI
DO
C9
0.1µF
R5
2.2kΩ
R6
10kΩ
R12
SHORT
R13
SHORT
R14
SHORT
R15
SHORT
R16
SHORT